HYDRAPAQ

HSQ35D Portable Hydraulic Pump Power Unit

This diesel power unit is powered by an Isuzu diesel engine and is enclosed in a secure sound reducing canopy. It is designed to drive several of our pump models from the S3A up to the S12M. A large, built-in fuel tank allows this unit to run up to 24 hours between refills.

DESIGN FEATURES:

- Bunded unit on road trailer chassis with optional fixed or variable height towing eye or ball hitch.
- Single point lifting bracket.
- Automatic engine safety shutdown package.
- Vane type hydraulic pump.
- Spin-on return filter with indicator.
- System relief valve.
- Pressure control valve.
- Liquid filled pressure gauge.
- Fluid level/temperature gauge.
- Variable speed control.
- Tank top filler/strainer.
- Optional skid frame.
- Optional multiple hydraulic circuits.
- For flows and pressures other than standard, consult SPP Pumps Ltd.

POWER UNIT SPECIFICATIONS

Engine	Isuzu 4LE2 Liquid Cooled Diesel		
Power	35 HP @ 2050 rpm		
Hydraulic Output	Variable to Maximum 76 l/m		
Operating Pressure	Maximum 172 bar		
Hose Port Size	3/4 in NPT		
Hydraulic Oil	SAE 10W or 20W Type AW or Bio-degradable Oil (Consult SPP for details)		
Oil Filtration	10 Micron (Standard)		
Oil Reservoir Capacity	114 Litres		
Fuel Tank Capacity	220 Litres		
Fuel Consumption	6.67 Litres / Hour		
Dimensions	Height 1786 mm	Width 1600 mm	Length 3800/4350 mm
Weight With Fuel & Oil	Fixed Height Tow Hitch 1242k g	Variable Height Tow Hitch 1277 kg	

Specifications may be subject to change without notice.

HSQ35D rev03 Trailers

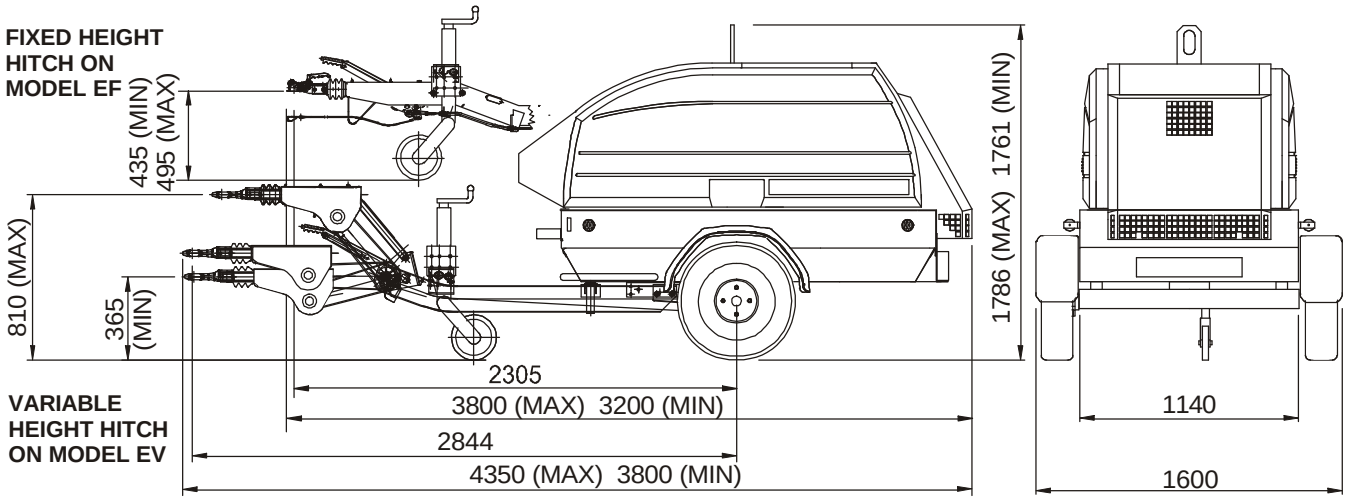

SPP Pumps Limited Theale Cross Reading Berkshire England RG31 7SP Tel: ++44(0) 1189 323 123
Website: www.spppumps.com email: solutions@spppumps.com Fax: ++44(0) 1189 323 302